WANSHSIN®
萬鑫精工

致力于打造世界一流的中国传动品牌

Medium Gear Motor

CONTENTS

中型减速机产品目录

Committed to building a world-class transmission brand

COMPANY **PROFILE**

万鑫精工(湖南)有限公司（简称万鑫精工）是集研发、生产、销售、服务于一体的专业化减速电机企业，主要生产高精密减速电机，产品广泛应用于机器人、机床、立体停车库等轻工自动化设备。作为一家专注于减速电机的制造商及智能自动化全套方案提供商，万鑫精工引入国外先进加工设备，致力于为全球客户提供技术前沿、品质卓越的各类减速电机产品，是国内减速电机行业的优质品牌。

为满足国内外客户的需求，全面开启国际化战略布局，万鑫精工立志走“精鑫”强企强国之路，先后引入国内外多名高新技术人才加盟，更加重视现有产品的质量提升以及新产品的研发。在未来的发展中，万鑫精工将继续秉持着“致力于铸就世界一流的中国传动品牌”的信念与愿景，为助推世界工业智能化发展而奋斗！

WANSHSIN SEIKOU (HUNAN) CO., LTD. (hereafter referred to as “WANSHSIN”) is professional gear motor manufacturer integrates R&D, production ,sales and service. WANSHSIN mainly manufactures high-precision gear motors which are widely used in robots, machine tools, solid garages and other industrial automation. As a gear motor manufacturer and complete intelligent automation solutions provider, WANSHSIN introduced advanced import processing equipment, adopted advanced technology, to meet the strict high quality requirement for worldwide customers. All efforts made WANSHSIN a reputable and high quality brand in domestic gear motor industry.

To satisfy domestic and foreign customers' requirements, WANSHSIN fully opened the international strategic layout, determined to follow the path of building a strong enterprise for a stronger country, WANSHSIN pays more attention to the quality improvement of current products and development of new products, and successively introduced high-tech talents, both domestic and international. In the future, WANSHSIN will continuously keep the faith that “Committed to building a world-class transmission brand” and strive to the development of the industrial intelligent system of the world.

Medium
GEAR MOTOR

INTERNAL
STRUCTURE

01 订购方式 SELECTION
马达规范 Motor specification
输出扭矩表 Output torque diagram

04 减速机之选定范例 EXAMPLE OF THE GEAR MOTOR SELECTED
连接方式 Connection mode
单相马达/刹车器结线方式 Single phase motor with break unit diagram

06 尺寸表 DIMENSIONS
06 立式三相标准IEC铝壳（刹车）马达
Vertical three-phase standard IEC aluminum(brake)motor
07 GH卧式附三相、单相铝壳（刹车）齿轮减速马达
GH horizontal single-phase three-phase, aluminum shell(brake)gear motor
08 GV立式附三相、单相铝壳（刹车）齿轮减速马达
GV Vertical single-phase three-phase, vertical aluminum shell(brake)gear motor
09 GH卧式高速比附三相、单相铝壳（刹车）齿轮减速马达
GH horizontal high-speed ratio single-phase three-phase, aluminum shell(brake)gear motor
09 GV立式高速比附三相、单相铝壳（刹车）齿轮减速马达
GV type vertical high-speed ratio single-phase three-phase, aluminum shell(brake)gear motor
10 GH卧式附三相、单相铝壳（刹车）缩框型齿轮减速马达
GH horizontal single-phase three-phase, aluminum shell(brake)shrink box type gear motor
11 GV立式附三相、单相铝壳（刹车）缩框型齿轮减速马达
GV vertical single-phase three-phase, vertical aluminum shell(brake)shrinkable gear motor
12 GH卧式高速比附三相、单相铝壳（刹车）缩框型齿轮减速马达
GH horizontal high-speed ratio single-phase three-phase, aluminum shell(brake)shrinkable gear motor
12 GV立式高速比附三相、单相铝壳（刹车）缩框型齿轮减速马达
GV vertical high-speed ratio single-phase three-phase, aluminum shell(brake)shrinkable gear motor
13 GHM卧式直结型齿轮减速机
GHM horizontal straight gear box
14 GVM立式直结型齿轮减速机
GVM vertical straight gear box
15 GHD卧式双轴型齿轮减速机
GHD horizontal type dual axle gear box
16 GVD立式双轴型齿轮减速机
GVD vertical type dual axle gear box

17 零件剖面图 DETAILS SECTIONAL VIEW

20 故障排除 TROUBLE SHOOTING

22 齿轮减速马达使用说明书
INSTRUCTIONS FOR GEAR MOTOR

MEDIUN
GEAR MOTOR
中型减速电机

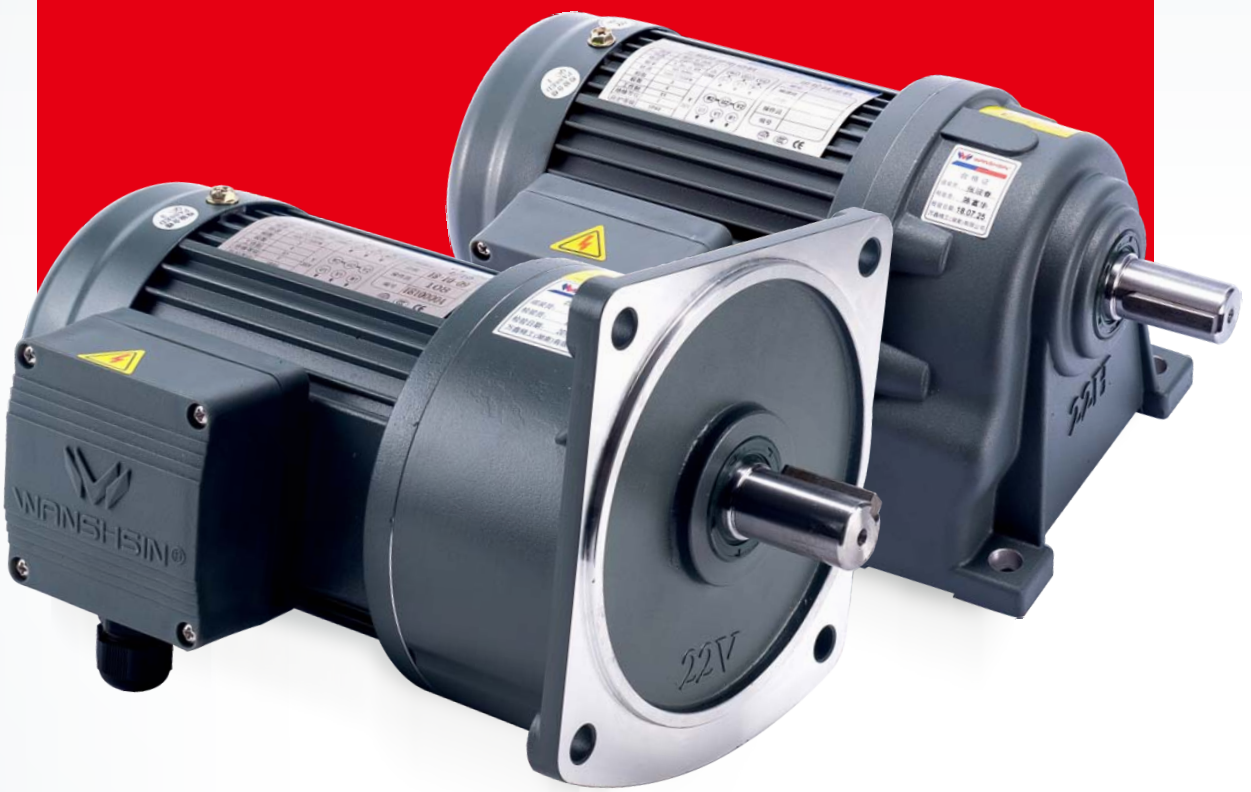

订购方式

SELECTION

型号命名 MODEL NAME

GH22400W30SBG1LDHO

1 2 3 4 5 6 7 8 9

1 型号
Model Code

GH	卧式安装齿轮减速电机 Horizontal Installation Gear Motor
GV	立式安装齿轮减速电机 Vertical Installation Gear Motor
GHM	卧式安装直结型齿轮减速机 Horizontal Installation Straight Gear Motor
GVM	立式安装直结型齿轮减速机 Vertical Installation Straight Gear Motor
GHD	卧式安装双轴型齿轮减速机 Horizontal Installation Dual Axel Gear Motor
GVD	立式安装双轴型齿轮减速机 Vetical Installation Dual Axel Gear Motor

2 出力轴 Output shaft
18、22、28、32……

3 马力 Power
100W-7500W

4 减速比 Ratio: 3、5、10、……1800

5 马达 Motor
S: 三相马达220V、380V/50、60HZ-three phase
A: 单相马达110V、220V/50、60HZ-Single phase

6 刹车器 Brake unit
B: 断电刹车器 BRAKE UNIT
AB: 手释放刹车器 WITH RELEASE BRAKE UNIT
D: DC24V送电刹车器 DC24V BRAKE

7 依出力轴看配线盒方向
Terminal box position view(from the output shaft direction)
G1: 左方向LEFT(标准型) (STD) G2: 右方向RIGHT
G3: 上方向UPPER G4: 下方向DOWN

8 入线口方向 Wire inlet
T: 向上TOP B: 向后BACK D: 向下DOWN
L: 向左LEFT F: 向前FORWARD R: 向右RIGHT

9 透气塞安装位置选定
Breather plug position

GH机型安装位置 GH MODEL INSTALLATION SITE		GV机型安装位置 GV MODEL INSTALLATION SITE	
H0标准(正立)	H3(左侧)	V0标准(正立)	V3(顺转90°)
H6(倒装)	H9(右侧)	V6(顺转180)	V9(逆转90°)
HU(轴向上)	HD(轴向下)	VU(轴向上)	VD(轴向下)

配线盒防线选定 TERMINAL BOX DIRECTION

TYPE	G1-左方向 LEFT SIDE	G2-右方向 RIGHT SIDE	G3-上方向 UPPER SIDE	G4-下方向 LOWER SIDE
GH型 GH TYPE	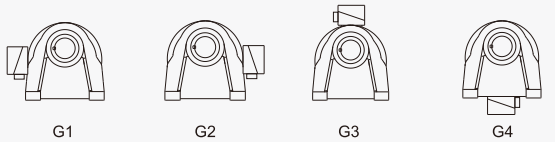 G1	G2	G3	G4
GV型 GV TYPE	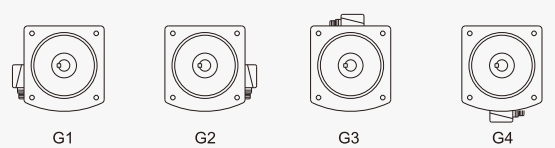 G1	G2	G3	G4
入线口方向 WIRE INLET DIRECTION	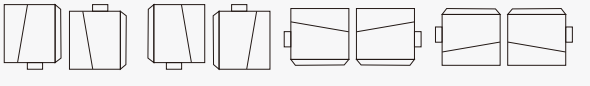 LD LT	RD RT	TL TR	DL DR
	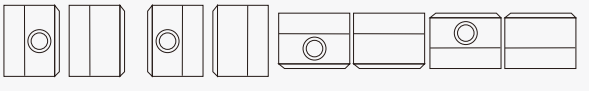 LF LB	RF RB	TF TB	DF DB

减速机与透气塞安装位置示意图

REDUCER AND BREATHER PLUG INSTALLATION

GH机型安装位置
GH MODELS INSTALLATION LOCATION

HO标准(正立) H3(左侧) H6(倒装)

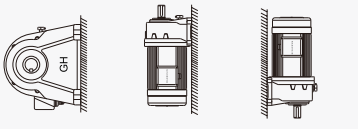

H9(右侧) HU(轴向上) HD(轴向下)

GV机型安装位置
GV MODELS INSTALLATION LOCATION

VO标准(正立) V3(顺转90°) V6(顺转180°)

V9(逆转90°) VU(轴向上) VD(轴向下)

- 除标准安装方式外，其余安装方式均需先告知本公司。
- Except HO installation site ,other installation site should be informed.

马达规范 MOTOR SPECIFICATION

kW

标准马达规范表 STANDARD MOTOR SPECIFICATION

项目ITEM	三相交流马达3-PHASE AC MOTOR		单相交流马达SINGLE PHASE AC MOTOR	
保证等级PROTECTION	全密闭外扇型IP44 TOTALLY ENCLOSED FAN COOLED TYPE		半密闭外扇区型 SEMI-ENCLOSED FAN COOLED TYPE	
外壳材质SHELL MATERIAL	0.1-7.5KW	铝合金 ALUMINUM	0.1-2.2KW	铝合金 ALUM ALLOY
启动方式STARTING MODE	全压启动 DIRECT STARTING		0.1-0.2KW	运转电容启动 CAPACITOR
			0.4-2.2KW	起动电容+运行电容+电子离心开关 STARTING CAPACITOR RUNNING CAPACITOR++ELECTRONIC CENTRIFUGAL SWITCH
定格TIMA RATING	连续运转CONTINUOUS OPERATION			
绝缘等级INSULATION	F（特殊行业产品除外）			
适用环境ENVIRONMENT	温度: -10℃~+40℃（TEMPERATURE: -10℃~+40℃） 湿度: ≤90%（HUMIDITY:≤90%）			
适用电压VOLTAGE	50HZ	220V,230V,240V,380V,400V,415V,440V	50HZ	110V,115V,200V,220V,230V
	60HZ	220V,240V,380V,415V,440V,460V,480V,600V	60HZ	110V,220V,240V
适用极数POLE	4P			
输出转数(4P)OUTPUT SPEED(4P)	50HZ	1360-1430RPM	50HZ	1340-1400RPM
	60HZ	1640-1740RPM	60HZ	1610-1720RPM
依据标准 STANDARD	IEC-34,CNS-10919ACCORDING TOIEC-34,CNS-10919			
海拔 ALTITUDE	≤1000m			
接线盒TERMINAL BOX	根据客户使用要求，有IP55级铝接线盒、防水型接线盒及不锈钢接线盒 WE SUPPLY GRADE IP55 ALUMINUM TERMINAL BOX, WATERPROOF TERMINAL BOX AND STAINLESS TERMINAL BOX			

单相电压全负载电流值 SINGLE PHASE FULL LOAD CURRENT

A

输出马力 OUTPUT POWER	50HZ			60HZ		
	110V	220V	RPM	110V	220V	RPM
100W	2.80	1.40	1350	2.40	1.20	1600
200W	3.60	1.80	1350	3.00	1.50	1600
400W	9.80	4.90	1350	7.80	3.90	1600
750W	18.2	9.10	1350	12.9	6.40	1600
1500W	26.0	13.0	1350	23.4	11.7	1600
2200W	36.0	18.0	1350	30.0	15.0	1600

单相马达电容器规格 SINGLE PHASE MOTOR CAPACITOR

输出马力 OUTPUT POWER	单电容型 SINGLE-CAPACITOR TYPE	双电容型DOUBLE-CAPACITOR TYPE	
		启动电容 STARTING CAPACITOR	运转电容 RUNNING CAPACITOR
75W	8μF	-	-
100W	12μF-16μF	-	-
200W	14μF-20μF	-	-
400W	-	200μF	20μF
750W	-	400μF	40μF
1500W	-	400μF	40μF
2200W	-	500μF	50μF

■ 三相电压全负载电流值 3-PHASE FULL LOAD CURRENT A

输出马力 OUTPUT POWER	50HZ					60HZ				
	220V	380V	415V	440V	RPM	230V	380V	440V	460V	RPM
100W	0.87	0.50	0.32	0.30	1420	0.60	0.40	0.30	0.29	1730
200W	1.39	0.80	0.70	0.58	1420	1.10	0.63	0.55	0.52	1730
400W	2.40	1.40	1.13	1.07	1420	1.90	1.10	0.95	0.91	1730
750W	3.80	2.20	1.94	1.84	1420	3.40	1.96	1.70	1.63	1730
1500W	6.90	4.00	3.94	3.30	1420	6.10	3.53	3.05	2.92	1730
2200W	9.50	5.50	4.74	4.47	1420	8.70	5.04	4.35	4.16	1730
3700W	15.9	9.20	7.34	6.93	1420	13.5	7.82	6.75	6.46	1730
5500W	20.8	12.0	-	-	1420	20.8	12.0	-	-	1730
7500W	26.0	15.0	-	-	1420	23.9	13.8	-	-	1730

输出扭矩表 OUTPUT TORQUE DIAGRAM KG-M

■ 标准型 NORMAL TYPE

减速比 RATIO	输出转速 OUTPUT RPM		输出扭矩OUTPUT TORQUE																	
			0.1KW		0.2KW		0.4KW		0.75KW		1.5KW		2.2KW		3.7KW		5.5KW		7.5KW	
	50HZ	60HZ	50HZ	60HZ	50HZ	60HZ	50HZ	60HZ	50HZ	60HZ	50HZ	60HZ	50HZ	60HZ	50HZ	60HZ	50HZ	60HZ	50HZ	60HZ
3	465	570	0.19	0.16	0.37	0.31	0.70	0.60	1.30	1.10	2.60	2.20	3.80	3.20	6.00	5.50	9.8	9	13.4	10.9
5	300	360	0.31	0.26	0.62	0.52	1.20	1.00	2.20	1.90	4.50	3.80	6.72	5.60	11.0	10.1	16.4	13.3	22.4	18.2
10	150	180	0.62	0.52	1.24	1.04	2.40	2.00	4.50	3.80	9.10	7.60	13.7	11.2	22.0	20.0	32.9	26.7	44.8	36.4
15	100	120	0.91	0.76	1.80	1.50	3.60	3.00	6.80	5.70	13.5	11.3	20.1	16.8	32.6	29.8	50.3	40	67.3	54.6
20	75	90	1.20	1.00	2.40	2.00	4.80	4.00	9.00	7.50	18.1	15.1	26.8	22.4	43.6	36.0	65.8	53.4	89.7	72.8
25	60	72	1.40	1.20	3.00	2.50	6.00	5.00	11.2	9.40	22.6	18.9	33.6	28.0	53.9	49.5	82.3	66.7	122.2	91
30	50	60	1.80	1.50	3.60	3.00	7.30	6.00	13.5	11.3	27.1	22.6	40.3	33.6	64.7	58.8	98.7	80.1	134.6	109.2
40	37	45	2.20	1.90	4.60	3.90	9.30	7.80	17.5	14.6	34.9	29.1	52.0	43.4	86.3	78.4	131	106.8	179.5	145.6
45	33	40	2.70	2.20	5.40	4.40	10.9	9.10	20.6	17.0	41.4	34.0	59.8	49.6	98.5	81.7	148.1	120.1	202	163.8
50	30	36	2.80	2.40	5.70	4.80	11.6	9.70	21.9	18.3	43.6	36.4	65.1	54.3	107	97.0	164.4	133.5	244.4	182
60	25	30	3.40	2.90	6.90	5.80	13.9	11.6	26.2	21.9	52.4	43.7	78.1	65.1	127	115	197.5	160.2	269.3	218.5
70	21	25	4.30	3.60	8.00	6.80	16.2	13.5	31.5	26.3	62.4	52.0	92.5	77.1	155	125.7	230.4	180.9		
80	19	23	4.80	4.00	9.20	7.70	18.4	15.4	35.5	29.6	70.8	59.0	105	87.5	177.1	143.7	263.3	213.6		
90	17	20	5.20	4.40	10.3	8.60	20.7	17.3	39.3	32.8	77.1	64.3	113	94.3	199.3	161.6	296.3	240.3		
100	15	18	5.80	4.90	11.5	9.60	23.0	19.2	43.2	36.0	83.7	69.8	126	105	221.5	179.6	329.2	267		
120	12	15	6.90	5.80	13.8	11.5	27.7	23.1	51.8	43.2	101	83.7	150	145	265.7	215.5				
140	11	13	8.00	6.70	16.0	13.4	32.0	26.7	59.7	49.8	116	96.8								
160	9	11	9.10	7.60	18.3	15.3	36.3	30.3	68.0	56.7	132	110								
180	8	10	10.3	8.60	20.7	17.3	40.8	34.0	76.8	64.0	148	123								
200	7	9	11.6	9.70	22.9	19.1	43.2	36.0	82.8	69.0										

减速机之选定范例

EXAMPLE OF THE GEAR MOTOR SELECTED

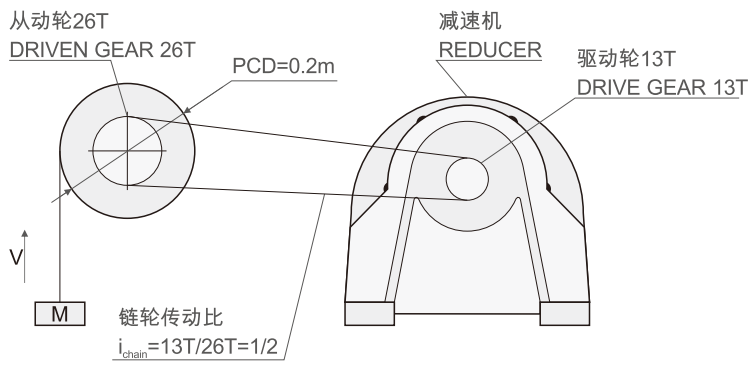

搬运物总重量: M=300KG
Total weight of load: M=300KG

搬送速度: V=9.5m/min
Speed: V=9.5m/min

链输传动效率:η_1=1
Chain transmission efficiency:η_1=1

减速机传动效率:η_2=0.9
Reducer transmission efficiency:η_2=0.9

运转时间: 2小时/日
Operation time: 2h/d

起动次数: 1回/分，中冲击
Times of starting: 1 time/min, medium impact

使用电源: 三相220V，50HZ
Power: 3-phase 220V, 50HZ

	注意事项 CAUTIONS	计算 CALCULATION
减速比 REDUCTION RATIO	由入力轴回转数及出力轴回转数来选定减速比 Reduction ratio should be decided by input shaft revolutions and output shaft revolutions. 1、先求出输送带滚轮回转数（N1） Find conveyor wheel revolutions(N1) N1= 搬送速度/（滚轮直径PCD·π） N1=speed/（PCD·π） 2、再求出减速机出力轴回转数（N2） Find reducer output shaft revolutions（N2） N2=N1/链轮齿数减速比 N2=N1/i_{chain} 3、以三相机60Hz的马达计算减速比 Calculate reduction ratio of 3-phase motor with frequency of 60Hz i=出力轴回转数/入力轴回转数（电机转数） i=Output shaft revolutions/input shaft revolutions(Motor revolutions）	1、N1=V/(PCD×π) =9.5/(0.2×3.14)=15r/min 2、N2=N1/链轮传动比 N2=N1/i_{chain} =15/(1/2)=30r/min 3、i=出力轴回转数/入力轴回转数 i=Output shaft revolutions/input shaft revolutions =30/1500=1/50
扭力 TORQUE	决定减速比后，由使用机械工作条件计算减速机出力轴扭矩 After reduction ratio is decided, torque of the reducers output shaft can be found according to mechanical conditions. 1、先算出输送带滚轮之扭力（T1） Firstly find torque(T1)of conveyance wheel ratio T1=(M·PCD)/2 2、再换算成减速机出力轴所须扭力（N2） Then find the torque(T2) of the output shaft of reducer T2=(T1·i_{chain})/(η_1·η_2)	1、T1=M·PCD/2 =300·0.2/2 =30kg.m 2、T2=(T1·i_{chain})/(η_1·η_2) =(30·0.5)(1·0.9) =16.7kg.m
负荷条件 LOAD CONDITIONS	1、根据运转条件算出修正后的扭力（T3） Find the adjusted torque(T3) according to operation conditions T3=T2·K 系数K(无冲击时K=1，冲击越大，K值越大) Coef.K(No impact K=1, The larger impact, The larger K value)	1、T3=T2·K =16.7·1 =16.7kg.m
马力 HORSE POWER	1、最后算成马力（Hp） Hp=(T3·N_2)/716.2	1、Hp=(T3·N_2)/716.2 =(16.7·30)/716.2 =0.7hp……(3/4hp)

- 按以上参数，得出减速机的减速比为1/50，扭力为16.7Kg.m，参照齿轮减速机性能表，对比得出选用减速机为550W。
- In accordance with the parameter, the reduction ratio of the reducer is 1/50, torque is 16.7kg.m.By reference to the performance table, we can find the power for reducer selected is 550W.

摩擦系数表 FRICTION FACTOR

链轮 SPROCKET	1.00
齿轮 GEAR	1.25
三角皮带 V BELT	1.50
平皮带 FLAT BELT	2.50

常用公式表 FREQUENTLY USED FORMULA

预知的条件 INTENDED CONDITIONS		已知的条件 KNOWN CONDITIONS	公式 FORMULA	
扭力 TORQUE	T1	动力(F)与半径(R)/马力(Hp)与回转数(N)(r.p.m)	T=F×R	(kgf-m)
扭力 TORQUE	T2		T=(716×Hp)/N	(kgf-m)
扭力 TORQUE	T3	动力(Kw)与回转数(N)(r.p.m)/扭力(T)与回转数(N)(r.p.m)	T=(974×Kw)/N	(kgf-m)
马力 HORSE TORQUE	Hp	扭力(T)与回转数(N)(r.p.m)/重力(F)与速度(V)(m/sec)	Hp=(T×N)716.2	(马力)
动力 POWER	Kw		Kw=(T×N)/974	(千瓦)
马力 HORSE TORQUE	Hp	重力(F)与速度(V)(m/sec)/齿轮、皮带轮等的	Hp=(F×V)/75	(马力)
动力 POWER	Kw	直径(D)与回转数(N)(r.p.m)	Kw=(F×V)/102	(千瓦)
速度 VELOCITY	V		V=(π×D×N)/60	(m/sec)
减速比 REDUCTION RATIO	I	入力回转数(N1)与出力回转数(N2)	I=N1/N2	

符号说明表 CODE DETAILS

V=速度 SPEED(M/MIN)	η=效率 EFFICIENCY(%)	1INCH=2.54CM
I=减速比 RATIO	N=出力轴转速(PRM)	1FOOT=12INCH
输出扭力(KG-M)OUTPUT TORQUE	D=滚轮直径(MM) ROLLER DIAMETER	1KW=1000W 1KW=1.34HP
连接系数 CONNECTING FACTOR	R=滚轮直径半径(MM) ROLLER RADIUS	1KG-M=7.233FT-LB 1KG-M=86.8IN-LB
荷重系数 SERVICE FACTOR	KW1(HP1)=入力马力 INPUT CAPACITY	1KG=2.2LB 1LB=0.4536KG
荷重(KG) LOAD	KW2(HP2)=输出马力 OUTPUT CAPACITY	1CM=10MM 1CM=0.39371NCH

连接方式 CONNECTION MODE

三相马达／刹车器结线方式
THREE PHASE MOTOR BRAKE UNIT DIAGRAM

三相六条马达电源线
SIX WIRES

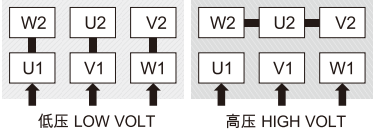

三相六条马达电源线附直流刹车器
SIX WIRES WITH DC BRAKE UNIT

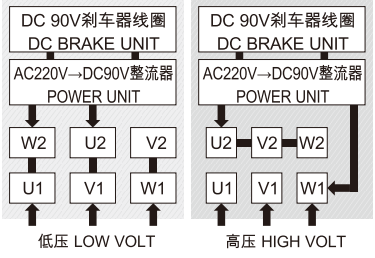

三相九条马达电源线
NINE WIRES

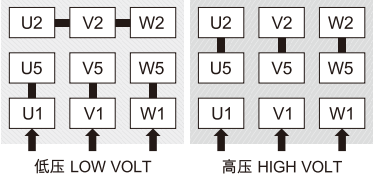

三相九条马达电源线附直流刹车器
NINE WIRES WITH DC BRAKE UNIT

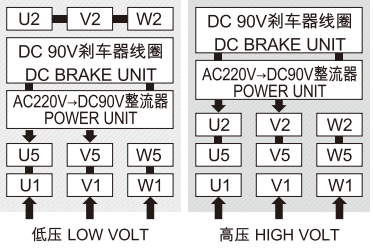

变频器附刹车马达
THE BRAKE MOTOR WITH FREQUENCY INVERTER

- 刹车电源与变频器电源需同时开关。
- Brake power and inverter power switch simultaneously.

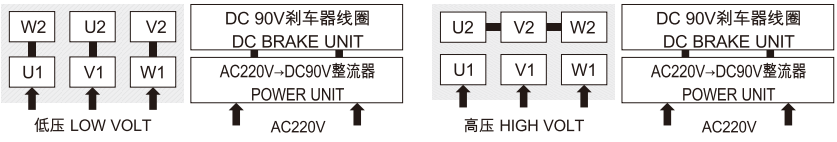

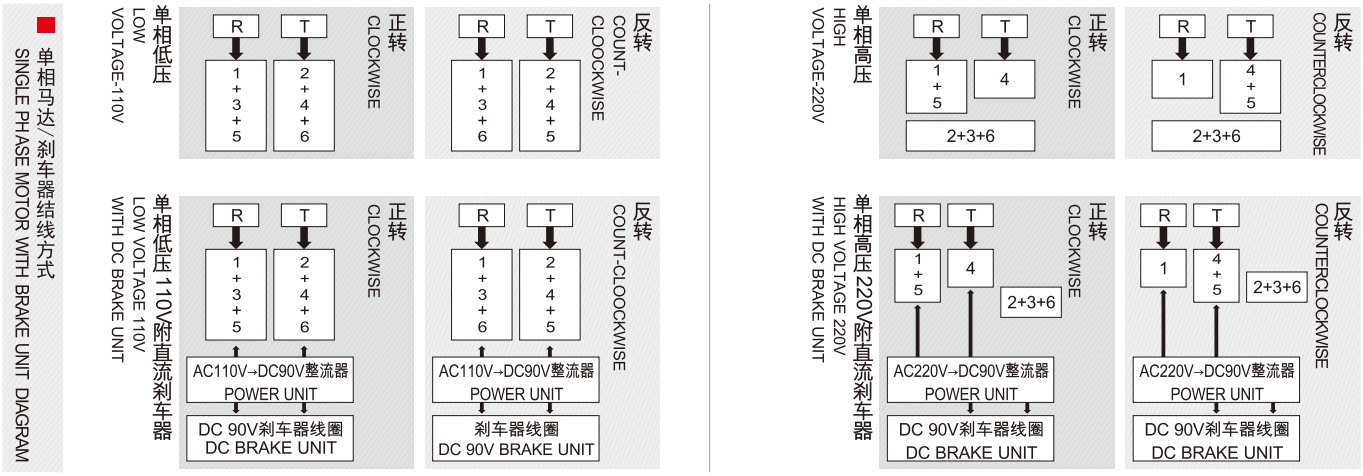

尺寸表

DIMENSIONS(MM)

1 立式三相标准IEC铝壳（刹车）马达

VERTICAL THREE-PHASE STANDARD IEC ALUMINUM (BRAKE) MOTOR

输出马达 OUTPUT POWER	A	A1	D	E	F	H	K	M	P	Q	R	S	T	W	Y	重量KG
200W 1/4HP	232	236	95	115	140	10	23	127	20	10	2	11	12.5	4	3	5.5
400W 1/2HP	250	254	110	130	160	10	30	127	27	14	2	14	16	5	3	6.9
750W 1HP	297	297	130	165	200	12	40	159	39	25	2	19	21.5	6	3	10.6
1500W 2HP	350	370	130	165	200	12	50	190	50	32	3	24	27	8	3.5	16.5
2200W 3HP	384	410	180	215	250	14.5	60	220	60	40	3	28	31	8	4	28
3700W 5HP	400	426	180	215	250	14.5	60	220	60	40	3	28	31	8	4	34.5
5500W 7.5HP	471	471	230	265	300	15	80	250	80	60	4	38	41.5	10	4	45
7500W 10HP	511	511	230	265	300	15	80	250	80	60	4	38	41.5	10	4	55

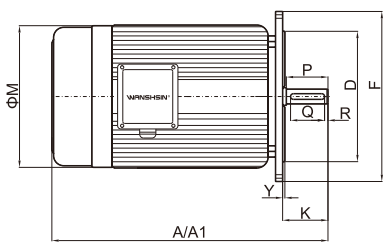

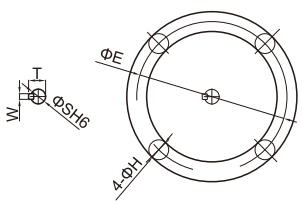

- A1为三相带刹车马达尺寸。
- A1 is the size of the three-phase motor with brake.

2 GH卧式附三相、单相铝壳（刹车）齿轮减速马达

GH HORIZONTAL SINGLE-PHASE THREE-PHASE,ALUMINUM SHELL(BRAKE)GEAR MOTOR

马力HP-4P	减速比 RATIO	本体 CODE	型号 SHAFT DIAMETER	A1	A2	A3	D	E	F	G	H	L	J	K	M1	M2	X	Y	Z1	Z2	重量KG
100W 1/8HP	3-50	1#	18	253	273	257	40	110	135	65	9	10	16	45	127	127	132	88.5	116	116	5.3
	60-200	2#	22	287	307	291	65	130	163	90	11	15	18.2	56	127	127	152	97.5	116	116	6.9
200W 1/4HP	3-10	1#	18	273	293	277	40	110	135	65	9	10	16	45	127	127	132	88.5	116	116	6.7
	15-90	2#	22	307	327	311	65	130	163	90	11	15	18.2	56	127	127	152	97.5	116	116	8.6
	100-200	3#	28	333	353	337	90	140	180	122	11	15	20.8	65	127	127	180	116	116	116	11
400W 1/2HP	3-10	2#	22	327	346	331	65	130	163	90	11	15	18.2	56	127	159	152	97.5	116	133	11
	15-90	3#	28	353	372	357	90	140	180	122	11	15	20.8	65	127	159	180	116	116	133	14
	100-200	4#	32	388	407	392	130	170	215	160	13	25	30.2	76	127	159	210	138.5	116	133	19.6
750W 1HP	3-25	3#	28	382	415	382	90	140	180	122	11	15	20.8	65	159	190	180	116	133	145	15
	30-120	4#	32	417	449	417	130	170	215	160	13	25	30.2	76	159	190	210	138.5	133	145	21.6
	130-200	5#	40	444	476	444	150	210	260	185	15	25	42.2	80	159	190	248	160	133	145	42
1500W 2HP	4-25	4#	32	449		470	130	170	215	160	13	25	30.2	76	190		210	138.5	145		27.6
	30-120	5#	40	476		497	150	210	260	185	15	25	42.2	80	190		248	160	145		47
	130-200	6#	50	517		538	170	265	330	220	19	30	51.7	104	190		315	200	145		52
2200W 3HP	3-60	5#	40	482		508	150	210	260	185	15	25	42.2	80	217		248	160	153		48
	70-200	6#	50	523		549	170	265	330	220	19	30	51.7	104	217		315	200	153		55
3700W 5HP	3-10	5#	40	498		524	150	210	260	185	15	25	42.2	80	217		248	160	153		50
	15-180	6#	50	539		565	170	265	330	220	19	30	51.7	104	217		315	200	153		57
5500W 7.5HP	5-10	7#	45	545		585	200	250	310	235	15	30	42.2	93	250		265	175	178		78
	11-30	8#	50	579		619	170	265	330	220	19	30	51.7	104	250		315	200	178		88
	31-60	8#	50	579		619	170	265	330	220	19	30	51.7	104	250		315	200	178		90
	61-100	8#	60	589		629	170	265	330	220	19	30	51.7	115	250		315	200	178		93
7500W 10HP	5-10	8#	50	619		659	170	265	330	220	19	30	51.7	104	250		315	200	178		99
	11-30	8#	60	629		669	170	265	330	220	19	30	51.7	115	250		315	200	178		103
	31-60	8#	60	629		669	170	265	330	220	19	30	51.7	115	250		315	200	178		110

出力轴尺寸 OUTPUT SHAFT SIZE	出力轴SHAFT		键槽KEYWAY			键KEY
	Sh6	P	W	T	Q	SPEC
	Φ18	30	5	20	25	5×5×25
	Φ22	40	7	25	35	7×7×35
	Φ28	45	7	31	40	7×7×40
	Φ32	55	10	35.5	50	10×8×50
	Φ40	65	10	43.5	60	10×8×60
	Φ45	75	12	48.5	70	12×8×70
	Φ50	80	14	54	75	14×9×75
	Φ60	90	15	63.5	85	15×10×85

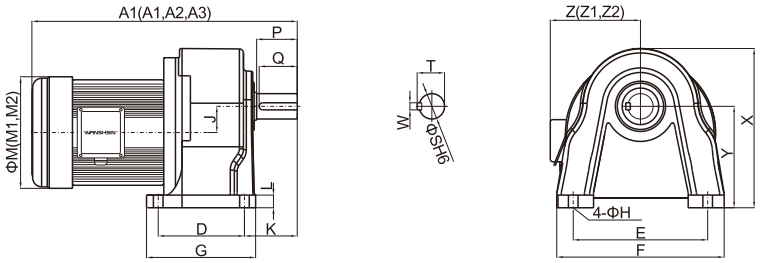

- A1、M1、Z1为三相马达尺寸。
- A2、M2、Z2为单相马达尺寸。
- A3为三相带刹车马达尺寸。
- A1、M1、Z1 are the sizes of three-phase motors.
- A2、M2、Z2 are the sizes of single-phase motors.
- A3 is the size of three-phase motors with brakes.

3 GV立式附三相、单相铝壳（刹车）齿轮减速马达

GV VERTICAL SINGLE-PHASE THREE-PHASE,VERTICAL ALUMINUM SHELL(BRAKE)GEAR MOTOR

马力HP-4P	减速比 RATIO	本体 CODE	型号 SHAFT DIAMETER	A1	A2	A3	D	E	F	G	H	L	J	K	M1	M2	Y	Z1	Z2	重量KG
100W 1/8HP	3-50	1#	*18	253	273	257	50	140	120	120	9	12	16	38	127	127	5	116	116	5.3
	60-200	2#	22	287	307	291	148	185	170	156	11	12	18.2	49	127	127	3.5	116	116	6.9
	60-200	2#	*22	287	307	291	55	170	146	146	11	12	18.2	49	127	127	3.5	116	116	6.7
200W 1/4HP	3-10	1#	*18	273	293	277	50	140	120	120	9	12	16	38	127	127	5	116	116	6.9
	15-90	2#	22	307	327	331	148	185	170	156	11	12	18.2	49	127	127	3.5	116	116	8.6
	15-90	2#	*22	307	327	311	55	170	146	146	11	12	18.2	49	127	127	3.5	116	116	8.6
	100-200	3#	28	333	353	337	170	220	195	180	11	15	20.8	57	127	127	4	116	116	11
400W 1/2HP	3-10	2#	22	327	346	331	148	185	170	156	11	12	18.2	49	127	159	3.5	116	133	11
	3-10	2#	*22	327	346	331	55	170	146	146	11	12	18.2	49	127	127	3.5	116	133	11
	15-90	3#	28	353	372	357	170	220	195	180	11	15	20.8	57	127	159	4	116	133	14
	100-200	4#	32	388	407	392	185	255	237	215	13	17	30.2	67	127	159	4	116	133	19.4
750W 1HP	3-25	3#	28	382	415	382	170	220	195	180	11	15	20.8	57	159	190	4	133	145	15
	30-120	4#	32	417	449	417	185	255	237	215	13	17	30.2	67	159	190	4	133	145	21.4
	130-200	5#	40	444	476	444	230	310	300	275	15	20	42.2	79	159	190	5	133	145	42
1500W 2HP	4-25	4#	32	449		470	185	255	237	215	13	17	30.2	67	190		4	145		27.4
	30-120	5#	40	476		497	230	310	300	275	15	20	42.2	79	190		5	145		47
	130-200	6#	50	517		538	280	390	360	330	19	20	51.7	90	190		5	145		52
2200W 3HP	3-60	5#	40	482		508	230	310	300	275	15	20	42.2	79	217		5	153		48
	70-200	6#	50	523		549	280	390	360	330	19	20	51.7	90	217		5	153		55
3700W 5HP	3-10	5#	40	498		524	230	310	300	275	15	20	42.2	79	217		5	153		50
	15-180	6#	50	539		565	280	390	360	330	19	20	51.7	90	217		5	153		57
5500W 7.5HP	3-10	7#	45	555		555	230	345	312	290	19	25	42.2	88.5	252		5	183		78

出力轴尺寸 OUTPUT SHAFT SIZE	出力轴SHAFT		键槽KEYWAY			键KEY
	Sh6	P	W	T	Q	SPEC
	Φ18	30	5	20	25	5×5×25
	Φ22	40	7	25	35	7×7×35
	Φ28	45	7	31	40	7×7×40
	Φ32	55	10	35.5	50	10×8×50
	Φ40	65	10	43.5	60	10×8×60
	Φ45	75	12	48.8	70	12×8×70
	Φ50	80	14	54	75	14×9×75

备注 NOTE：

1、1#本体（型号为18）C1为33.5，C2为65.5
1# Ontology（Models for 18）
C1 is 33.5，C2 is 65.5

2、2#本体（型号为22）C1为40，C2为80
2# Ontology（Models for 22）
C1 is 40，C2 is 80

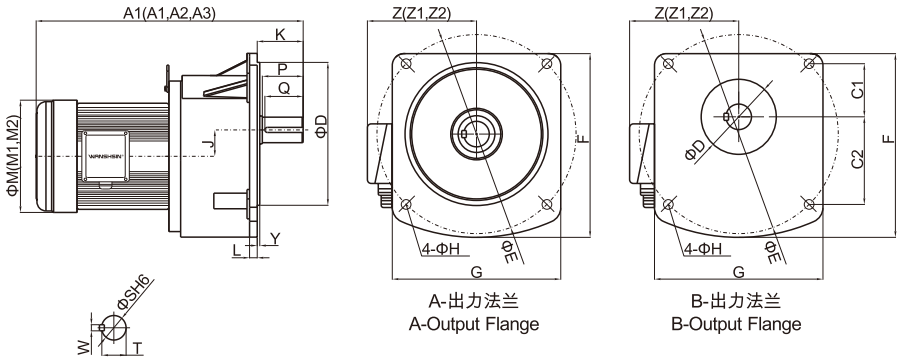

- A1、M1、Z1为三相马达尺寸。
- A2、M2、Z2为单相马达尺寸。
- A3为三相带刹车马达尺寸。
- A1、M1、Z1 are the sizes of three-phase motors.
- A2、M2、Z2 are the sizes of single-phase motors.
- A3 is the size of three-phase motors with brakes.

- *属于B型号出力法兰。

4 GH卧式高速比附三相、单相铝壳（刹车）齿轮减速马达

GH HORIZONTAL HIGH-SPEED RATIO SINGLE-PHASE THREE-PHASE,ALUMINUM SHELL(BRAKE)GEAR MOTOR

马力HP-4P	减速比 RATIO	本体 CODE	型号 SHAFT DIAMETER	A1	A2	A3	D	E	F	G	H	L	J	K	M1	M2	X	Y	Z1	Z2	重量KG
100W 1/8HP	250-1800	1#+3#	28	390	410	394	90	140	180	120	11	15	20.8	65	127	127	180	116	116	116	13.2
200W 1/4HP	250-1800	2#+4#	32	471	491	475	130	170	215	160	13	20	30.2	76	127	127	210	138.5	116	116	23.2
400W 1/2HP	250-1800	3#+5#	40	532	551	536	150	210	260	185	15	23	42.2	80	127	159	248	160	116	133	49
750W 1HP	250-1800	3#+6#	50	602	635	602	170	265	330	220	19	25	51.7	104	159	190	315	200	133	145	59

出力轴尺寸OUTPUT SHAFT	出力轴SHAFT		键槽KEYWAY			键KEY
	Sh6	P	W	T	Q	SPEC
	Φ28	45	7	31	40	7×7×40
	Φ32	55	10	35.5	50	10×8×50
	Φ40	65	10	43.5	60	10×8×60
	Φ50	80	14	54	75	14×9×75

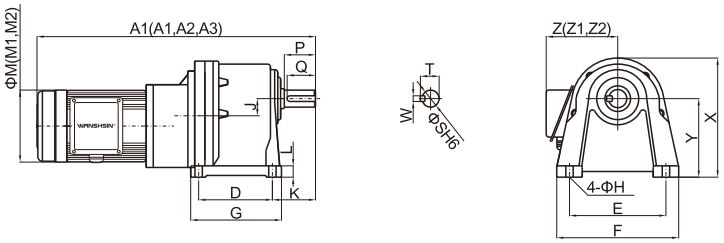

- A1、M1、Z1为三相马达尺寸。
- A2、M2、Z2为单相马达尺寸。
- A3为三相带刹车马达尺寸。
- A1、M1、Z1 are the sizes of three-phase motors.
- A2、M2、Z2 are the sizes of single-phase motors.

5 GV立式高速比附三相、单相铝壳（刹车）齿轮减速马达

GV VERTICAL HIGH-SPEED RATIO SINGLE-PHASE THREE-PHASE,ALUMINUM SHELL(BRAKE)GEAR MOTOR

马力HP-4P	减速比 RATIO	本体 CODE	型号 SHAFT DIAMETER	A1	A2	A3	D	E	F	G	H	L	J	K	M1	M2	Y	Z1	Z2	重量KG
100W 1/8HP	250-1800	1#+3#	28	390	410	394	170	220	195	180	11	15	20.8	57	127	127	4	116	116	13.2
200W 1/4HP	250-1800	2#+4#	32	471	491	475	185	255	237	215	13	15	30.2	67	127	127	4	116	116	23
400W 1/2HP	250-1800	3#+5#	40	532	551	536	230	310	300	275	15	20	42.2	79	127	159	5	116	133	49
750W 1HP	250-1800	3#+6#	50	602	635	602	280	390	360	330	19	20	51.7	90	159	190	5	133	145	59

出力轴尺寸OUTPUT SHAFT SIZE	出力轴SHAFT		键槽KEYWAY			键KEY
	Sh6	P	W	T	Q	SPEC
	Φ28	30	7	31	40	7×7×40
	Φ32	55	10	35.5	50	10×8×50
	Φ40	65	10	43.5	60	10×8×60
	Φ50	80	14	54	75	14×9×75

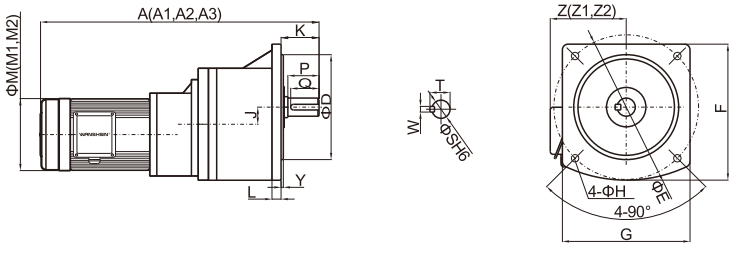

- A1、M1、Z1为三相马达尺寸。
- A2、M2、Z2为单相马达尺寸。
- A3为三相带刹车马达尺寸。
- A1、M1、Z1 are the sizes of three-phase motors.
- A2、M2、Z2 are the sizes of single-phase motors.

6 GH卧式附三相、单相铝壳（刹车）缩框型齿轮减速马达

GH HORIZONTAL WITH SINGLE-PHASE THREE-PHASE,ALUMINUM SHELL(BRAKE)SHRINK BOX TYPE GEAR MOTOR

马力HP-4P	减速比 RATIO	本体 CODE	型号 SHAFT DIAMETER	A1	A2	A3	D	E	F	G	H	L	J	K	M1	M2	X	Y	Z1	Z2	重量KG
100W 1/8HP	50-200	1#	18	253	273	257	40	110	135	65	9	10	16	45	127	127	132	88.5	116	116	5.3
200W 1/4HP	15-90	1#	18	273	293	277	40	110	135	65	9	10	16	45	127	127	132	88.5	116	116	5.3
	100-200	2#	22	307	327	311	65	130	163	90	11	15	18.2	56	127	127	152	97.5	116	116	6.9
400W 1/2HP	3-10	1#	18	293	310	297	40	110	135	65	9	10	16	45	127	159	132	88.5	116	133	6.7
	15-90	2#	22	327	346	331	65	130	163	90	11	15	18.2	56	127	159	152	97.5	116	133	8.6
	100-200	3#	28	353	372	357	90	140	180	122	11	15	20.8	65	127	159	180	116	116	133	11
750W 1HP	3-25	2#	22	356	390	356	65	130	163	90	11	15	18.2	56	159	190	152	97.5	133	145	11
	30-120	3#	28	382	414	382	90	140	180	122	11	15	20.8	65	159	190	180	116	133	145	14
	130-200	4#	32	417	449	417	130	170	215	160	13	25	30.2	76	159	190	210	138.5	133	145	19.6
1500W 2HP	4-25	3#	28	415		436	90	140	180	122	11	15	20.8	65	190		180	116	145		15
	30-120	4#	32	449		470	130	170	215	160	13	25	30.2	76	190		210	138.5	145		21.6
	130-200	5#	40	476		497	150	210	260	185	15	25	42.2	80	190		248	160	145		42
2200W 3HP	3-60	4#	32	455		481	130	170	215	160	13	25	30.2	76	190		210	138.5	153		27.6
	70-200	5#	40	482		508	150	210	260	185	15	25	42.2	80	217		248	160	153		47
3700W 5HP	30-180	5#	40	498		524	150	210	260	185	15	25	42.2	80	217		248	160	153		52

出力轴尺寸 OUTPUT SHAFT SIZE	出力轴SHAFT		键槽KEYWAY			键KEY
	Sh6	P	W	T	Q	SPEC
	Φ18	30	5	20	25	5×5×25
	Φ22	40	7	25	35	7×7×35
	Φ28	45	7	31	40	7×7×40
	Φ32	55	10	35.5	50	10×8×50
	Φ40	65	10	43.5	60	10×8×60

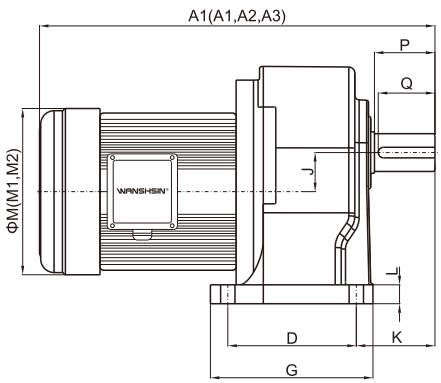

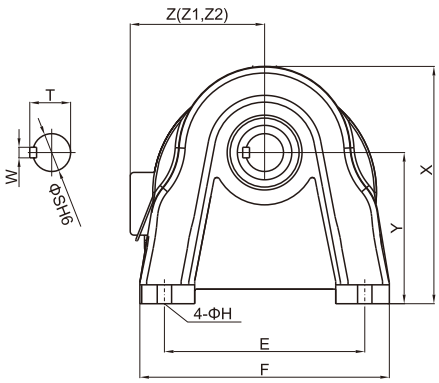

- A1、M1、Z1为三相马达尺寸。
- A2、M2、Z2为单相马达尺寸。
- A3为三相带刹车马达尺寸。
- A1、M1、Z1 are the sizes of three-phase motors.
- A2、M2、Z2 are the sizes of single-phase motors.
- A3 is the size of three-phase motors with brakes.
- 请选用标准框号齿轮减速马达，如特殊原因需选择缩框型
- Please select standard frame gear motor,if for some particular application,you need to select the shrink box type.

7 GV立式附三相、单相铝壳（刹车）缩框型齿轮减速马达

GV VERTICAL SINGLE-PHASE THREE-PHASE,VERTICAL ALUMINUM SHELL(BRAKE)SHRINKABLE GEAR MOTOR

马力HP-4P	减速比 RATIO	本体 CODE	型号 SHAFT DIAMETER	A1	A2	A3	D	E	F	G	H	L	J	K	M1	M2	Y	Z1	Z2	重量KG
100W 1/8HP	50-200	1#	18	253	273	257	50	140	120	120	9	12	16	38	127	127	5	116	116	5.3
200W 1/4HP	15-90	1#	*18	273	293	277	50	140	120	120	9	12	16	38	127	127	5	116	116	5.3
	100-200	2#	22	307	327	311	148	185	170	156	11	12	18.2	49	127	127	3.5	116	116	6.9
	100-200	2#	*22	307	327	311	55	170	146	146	11	12.8	18.2	49	127	127	3.5	116	116	6.9
400W 1/2HP	3-10	1#	*18	293	345	297	50	140	120	120	9	12.8	16	38	127	159	5	116	133	6.7
	15-90	2#	22	327	346	331	148	185	170	156	11	12.8	18.2	49	127	159	3.5	116	133	8.6
	15-90	2#	*22	327	346	331	55	170	146	146	11	12	18.2	49	127	127	3.5	116	133	8.0
	100-200	3#	28	353	372	357	170	220	195	180	11	15	20.8	57	127	159	4	116	133	11
750W 1HP	3-25	2#	22	355	395	355	148	185	170	156	11	12	18.2	49	159	190	3.5	133	145	11
	3-25	2#	*22	355	395	355	55	170	146	146	11	12	18.2	49	159	190	3.5	133	145	11
	30-120	3#	28	382	415	382	170	220	195	180	11	15	20.8	57	159	190	4	133	145	14
	130-200	4#	32	417	449	417	185	255	237	215	13	17	30.2	67	159	190	4	133	145	19.4
1500W 2HP	4-25	3#	28	415		436	170	220	195	180	11	15	20.8	57	190		4	145		15
	30-120	4#	32	449		470	185	255	237	215	13	17	30.2	67	190		4	145		21.4
	130-200	5#	40	476		497	230	310	300	275	15	20	42.2	79	190		5	145		42
2200W 3HP	3-60	4#	32	455		481	185	255	237	215	13	17	30.2	67	190		4	153		27.4
	70-200	5#	40	482		508	230	310	300	275	15	20	42.2	79	217		5	153		47
3700W 5HP	30-180	5#	40	498		524	230	310	300	275	15	20	42.2	79	217		5	153		52

出力轴尺寸OUTPUT SHAFT SIZE	出力轴SHAFT		键槽KEYWAY			键KEY
	Sh6	P	W	T	Q	SPEC
	Φ18	30	5	20	25	5×5×25
	Φ22	40	7	25	35	7×7×35
	Φ28	45	7	31	40	7×7×40
	Φ32	55	10	35.5	50	10×8×50
	Φ40	65	10	43.5	60	10×8×60

备注 NOTE：

1、1#本体（型号为18）C1为33.5，C2为65.5
1# Ontology（Models for 18）
C1 is 33.5，C2 is 65.5

2、2#本体（型号为22）C1为40，C2为80
2# Ontology（Models for 22）
C1 is 40，C2 is 80

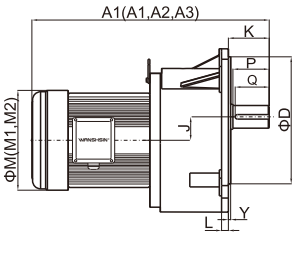

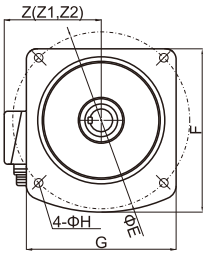

A-出力法兰
A-Output Flange

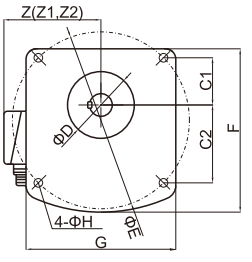

B-出力法兰
B-Output Flange

- A1、M1、Z1为三相马达尺寸。
- A2、M2、Z2为单相马达尺寸。
- A3为三相带刹车马达尺寸。
- A1、M1、Z1 are the sizes of three-phase motors.
- A2、M2、Z2 are the sizes of single-phase motors.
- A3 is the size of three-phase motors with brakes.

- *属于B型号出力法兰。
- 请选用标准框号齿轮减速马达，如特殊原因需选择缩框型

- Please select standard gear motor,for special cases, select shrinkable gear motor.

8 GH卧式高速比附三相、单相铝壳（刹车）缩框型齿轮减速马达

GH HORIZONTAL HIGH-SPEED RATIO SINGLE-PHASE THREE-PHASE ,ALUMINUM SHELL(BRAKE)SHRINKABLE GEAR MOTOR

马力HP-4P	减速比 RATIO	本体 CODE	型号 SHAFT DIAMETER	A1	A2	A3	D	E	F	G	H	L	J	K	M1	M2	X	Y	Z1	Z2	重量KG
100W 1/8HP	250-1800	1#+2#	22	365	385	369	65	130	163	90	11	15	18.2	56	127	127	152	97.5	116	116	13.2
200W 1/4HP	250-1800	1#+3#	28	410	430	414	90	140	180	122	11	15	20.8	65	127	127	180	116	116	116	29.6
400W 1/2HP	250-1800	2#+4#	32	491	510	495	130	170	215	160	13	25	30.2	76	127	159	210	138.5	116	133	42.6
750W 1HP	250-1800	3#+5#	40	561	594	561	150	210	260	185	15	25	42.2	80	159	190	248	160	133	145	59

出力轴尺寸OUTPUT SHAFT SIZE	出力轴SHAFT		键槽KEYWAY			键KEY
	Sh6	P	W	T	Q	SPEC
	Φ22	40	7	25	35	7×7×35
	Φ28	45	7	31	40	7×7×40
	Φ32	55	10	35.5	50	10×8×50
	Φ40	65	10	43.5	60	10×8×60

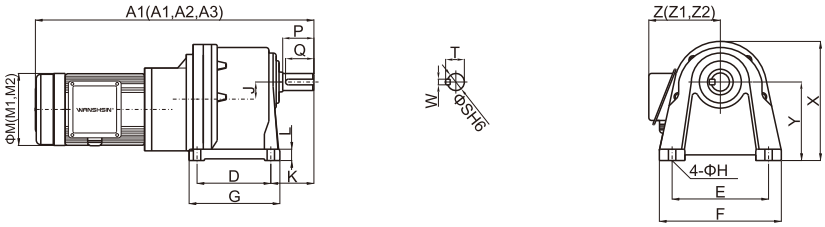

- A1、M1、Z1为三相马达尺寸。
- A2、M2、Z2为单相马达尺寸。
- A3为三相带刹车马达尺寸。
- A1、M1、Z1 are the sizes of three-phase motors.
- A2、M2、Z2 are the sizes of single-phase motors.

- 请选用标准框号齿轮减速马达，如特殊原因需选择缩框型
- Please select standard gear motor,for special cases, select shrinkable gear motor.

9 GV立式高速比附三相、单相铝壳（刹车）缩框型齿轮减速马达

GV VERTICAL HIGH-SPEED RATIO SINGLE-PHASE THREE-PHASE,ALUMINUM SHELL(BRAKE)SHRINKABLE GEAR MOTOR

马力HP-4P	减速比 RATIO	本体 CODE	型号 SHAFT DIAMETER	A1	A2	A3	D	E	F	G	H	L	J	K	M1	M2	Y	Z1	Z2	重量KG
100W 1/8HP	250-1800	1#+2#	22	364	384	368	148	185	170	156	11	12	18.2	49	127	127	3.5	116	116	13.2
200W 1/4HP	250-1800	1#+3#	28	410	430	414	170	220	195	180	11	15	20.8	57	127	127	4	116	116	29.6
400W 1/2HP	250-1800	2#+4#	32	491	510	495	185	255	237	215	13	17	30.2	67	127	159	4	116	133	42.4
750W 1HP	250-1800	3#+5#	40	561	594	561	230	310	300	275	15	20	42.2	79	159	190	4	133	145	59

出力轴尺寸OUTPUT SHAFT SIZE	出力轴SHAFT		键槽KEYWAY			键KEY
	Sh6	P	W	T	Q	SPEC
	Φ22	40	7	25	35	7×7×35
	Φ28	45	7	31	40	7×7×40
	Φ32	55	10	35.5	50	10×8×50
	Φ40	65	10	43.5	60	10×8×60

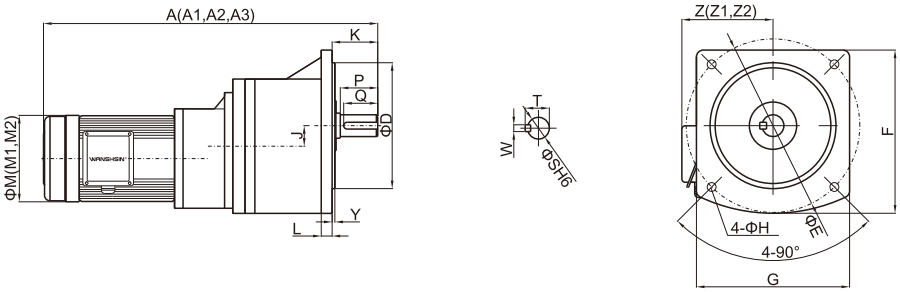

- A1、M1、Z1为三相马达尺寸。
- A2、M2、Z2为单相马达尺寸。
- A3为三相带刹车马达尺寸。
- A1、M1、Z1 are the sizes of three-phase motors.
- A2、M2、Z2 are the sizes of single-phase motors.

- 请选用标准框号齿轮减速马达，如特殊原因需选择缩框型
- Please select standard gear motor,for special cases, select shrinkable gear motor.

10 GHM卧式直结型齿轮减速机

GHM HORIZONTAL STRAIGHT GEAR BOX

马力HP-4P	减速比 RATIO	型号 SHAFT DIAMETER	A	B	C	D	E	F	G	H	I	J	K	L	N	X	Y	Z	重量KG
200W 1/4HP	3-10	18	153	95	115	40	110	135	65	9	52.5	16	45	10	140	132	88.5	M8	4
	15-90	22	188	95	115	65	130	159	90	11	52.5	18.2	56	15	140	152	97.5	M8	6
	100-200	28	216	95	115	90	140	180	122	11	52.5	20.8	65	15	140	180	116	M8	8
400W 1/2HP	3-10	22	188	110	130	65	130	160	90	11	52.5	18.2	56	15	158	152	97.5	M8	6
	15-90	28	216	110	130	90	140	180	122	11	52.5	20.8	65	15	158	180	116	M8	8
	100-200	32	250	110	130	130	170	215	160	13	52.5	30.2	76	25	158	210	138.5	M8	14.6
750W 1HP	3-25	28	250	130	165	90	140	180	122	11	90.8	20.8	66	15	198	180	116	M10	11
	30-120	32	288	130	165	130	170	215	160	13	90.8	30.2	76	25	198	210	138.5	M10	19.6
	125-200	40	313	130	165	150	210	260	185	15	90.8	42.2	85	25	198	248	160	M10	38
1500W 2HP	3-25	32	288	130	165	130	170	215	160	13	90.8	30.2	76	25	198	210	138.5	M10	19.6
	30-120	40	313	130	165	150	210	260	185	15	90.8	42.2	80	25	198	248	160	M10	39
2200W 3HP	3-60	40	320	180	215	150	210	260	185	15	95	42.2	80	25	250	248	160	M12	40
	70-120	50	360	180	215	170	265	330	220	18	95	51.7	104	30	250	315	200	M12	45
3700W 5HP	3-25	40	320	180	215	150	210	260	185	15	95	42.2	80	25	250	248	160	M12	50
	30-80	50	360	180	215	170	265	330	220	18	95	51.7	104	30	250	315	200	M12	55

入力轴尺 INPUT SHAFT SIZE	马力KW	入力轴SHAFT	键槽KEYWAY	
		S1	W1	T1
	1/4HP	Φ11	4	12.8
	1/2HP	Φ14	5	16.3
	1HP	Φ19	6	21.8
	2HP	Φ24	8	27.3
	3HP	Φ28	8	31.3
	5HP	Φ28	8	31.3

出力轴尺寸 OUTPUT SHAFT SIZE	出力轴SHAFT		键槽KEYWAY			键KEY
	Sh6	P	W	T	Q	SPEC
	Φ18	30	5	20	25	5×5×25
	Φ22	40	7	25	35	7×7×35
	Φ28	45	7	31	40	7×7×40
	Φ32	55	10	35.5	50	10×8×50
	Φ40	65	10	43.5	60	10×8×60
	Φ50	80	14	54	75	14×9×75

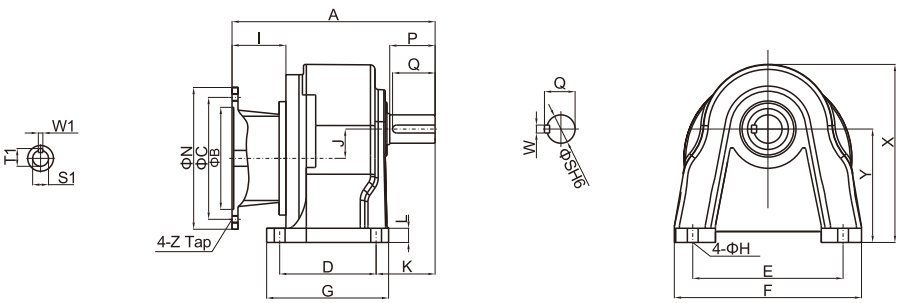

- 配合IEC马达为主.
- Available for IEC motor.

11 GVM立式直结型齿轮减速机
GVM VERTICAL STRAIGHT GEAR BOX

马力HP-4P	减速比 RATIO	型号 SHAFT DIAMETER	A	B	C	D	E	F	G	H	I	J	K	L	N	Y	Z	重量KG
200W 1/4HP	3-10	*18	153	95	115	50	140	120	120	9	52.5	16	38	12	140	5	M8	4
	15-90	22	188	95	115	148	185	170	156	11	52.5	18.2	49	12	140	3.5	M8	6
	15-90	*22	188	95	115	55	170	146	146	11	52.5	18.2	49	12	140	3.5	M8	6
	100-200	28	216	95	115	170	220	195	180	11	52.5	20.8	57	15	140	4	M8	8
400W 1/2HP	3-10	22	188	110	130	148	185	170	156	11	52.5	18.2	49	12	158	3.5	M8	6
	3-10	*22	188	110	130	55	170	146	146	11	52.5	18.2	49	12	158	3.5	M8	6
	15-90	28	216	110	130	170	220	195	180	11	52.5	20.8	57	15	158	4	M8	8
	100-200	32	250	110	130	185	255	237	215	13	52.5	30.2	67	17	158	4	M8	14.6
750W 1HP	3-25	28	250	130	165	170	220	195	180	11	90.8	20.8	57	15	198	4	M10	11
	30-120	32	288	130	165	185	255	237	215	13	90.8	30.2	67	17	198	5	M10	19.6
	125-200	40	313	130	165	230	310	300	275	15	90.8	42.2	79	20	198	4	M10	38
1500W 2HP	3-25	32	288	130	165	185	255	237	215	13	90.8	30.2	67	17	198	5	M10	19.6
	30-120	40	313	130	165	230	310	300	275	15	90.8	42.2	79	20	198	5	M10	39
2200W 3HP	3-60	40	320	180	215	230	310	300	275	15	95	42.2	79	20	250	5	M12	39
	70-120	50	360	180	215	280	390	360	330	19	95	51.7	90	20	250	5	M12	44
3700W 5HP	3-25	40	320	180	215	230	310	300	275	15	95	42.2	79	20	250	5	M12	55
	30-80	50	360	180	215	280	390	360	330	19	95	51.7	90	20	250	5	M12	60

入力轴尺寸INPUT SHAFT SIZE	马力KW	入力轴SHAFT	键槽KEYWAY	
		S1	W1	T1
	1/4HP	Φ11	4	12.8
	1/2HP	Φ14	5	16.3
	1HP	Φ19	6	21.8
	2HP	Φ24	8	27.3
	3HP	Φ28	8	31.3
	5HP	Φ28	8	31.3

出力轴尺寸OUTPUT SHAFT SIZE	出力轴SHAFT		键槽KEYWAY			键KEY
	Sh6	P	W	T	Q	SPEC
	Φ18	30	5	20	25	5×5×25
	Φ22	40	7	25	35	7×7×35
	Φ28	45	7	31	40	7×7×40
	Φ32	55	10	35.5	50	10×8×50
	Φ40	65	10	43.5	60	10×8×60
	Φ50	80	14	54	75	14×9×75

备注 NOTE：
1、1#本体（型号为18）C1为33.5，C2为65.5
1# Ontology（Models for 18）
C1 is 33.5，C2 is 65.5
2、2#本体（型号为22）C1为40，C2为80
2# Ontology（Models for 22）
C1 is 40，C2 is 80

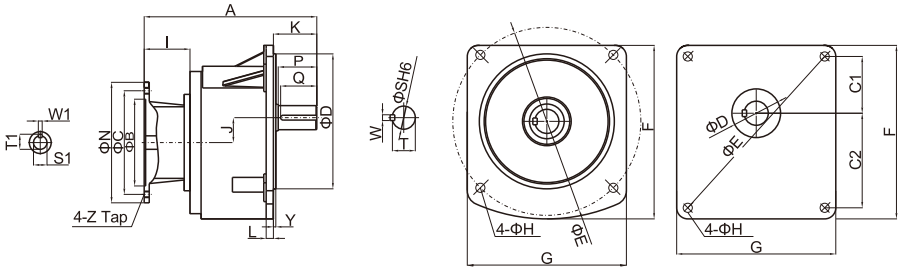

A-出力法兰
A-Output Flange

B-出力法兰
B-Output Flange

- 配合IEC马达为主。
- Available for IEC motor.

- *属于B型号出力法兰。
- *Belong to B type output flange.

12 GHD卧式双轴型齿轮减速机

GHD HORIZONTAL TYPE DUAL AXIS GEAR BOX

马力 HP-4P	减速比 RATIO	型号 SHAFT DIAMETER	A	D	E	F	G	H	J	K	L	M	X	Y	重量KG
100W 1/8HP	3-50	18	168	40	110	135	65	9	16	45	10	72.5	132	88.5	3
	60-200	22	200	65	130	160	90	11	18.2	56	15	80	152	97.5	4
200W 1/4HP	3-10	18	168	40	110	135	65	9	16	45	10	72.5	132	88.5	3
	15-90	22	200	65	130	160	90	11	18.2	56	15	80	152	97.5	5
	100-200	28	258	90	140	180	120	11	20.8	65	15	95.2	180	116	7
400W 1/2HP	3-10	22	207	65	130	160	90	11	18.2	56	15	80	152	97.5	6
	15-90	28	263	90	140	180	120	11	20.8	65	15	95.2	180	116	7
	100-200	32	300	130	170	215	160	13	30.2	76	25	108.5	210	138.5	12.6
750W 1HP	3-25	28	269	90	140	180	120	11	20.8	65	15	95.2	180	116	7
	30-120	32	310	130	170	215	160	13	30.2	76	25	108.5	210	138.5	14.6
	125-200	40	336	150	210	260	185	15	42.2	80	25	117.8	248	160	35
1500W 2HP	3-25	32	320	130	170	215	160	13	30.2	76	25	108.5	210	138.5	14.6
	30-120	40	350	150	210	260	185	15	42.2	80	25	117.8	248	160	35
2200W 3HP	3-60	40	360	150	210	260	185	15	42.2	80	25	117.8	248	160	35
	70-120	50	410	170	265	330	220	19	51.7	104	30	148.6	315	200	43
3700W 5HP	3-25	40	360	150	210	260	185	15	42.2	80	25	117.8	248	160	35
	30-80	50	410	170	265	330	220	19	51.7	104	30	148.6	315	200	43

入力轴尺寸 INPUT SHAFT SIZE	入力轴SHAFT			键槽KEYWAY			键KEY
	KW	S1h6	P1	W1	T1	Q1	SPEC
	0.1/0.2	14	30	5	16	26	5×5×25
	0.4	14	30	5	16	26	5×5×25
	0.75	19	40	6	21.5	35	6×6×35
	1.5	24	50	8	27	45	8×7×45
	2.2	28	60	8	31	50	8×7×50
	3.7	28	60	8	31	50	8×7×50

出力轴尺寸 OUTPUT SHAFT SIZE	出力轴SHAFT		键槽KEYWAY			键KEY
	Sh6	P	W	T	Q	SPEC
	Φ18	30	5	20	25	5×5×25
	Φ22	40	7	25	35	7×7×35
	Φ28	45	7	31	40	7×7×40
	Φ32	55	10	35.5	50	10×8×50
	Φ40	65	10	43.5	60	10×8×60
	Φ50	80	14	54	75	14×9×75

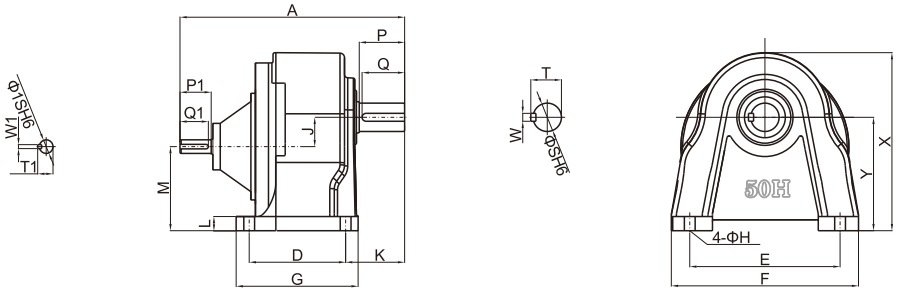

13 GVD立式双轴齿轮减速机
GVD VERTICAL DUAL AXIS GEAR BOX

马力HP-4P	减速比 RATIO	型号 SHAFT DIAMETER	A	D	E	F	G	H	J	K	L	Y	重量KG
100W 1/8HP	3-50	*18	168	50	140	120	120	9	16	38	12	5	3
	60-200	22	200	148	185	170	156	11	18.2	49	12	3.5	4
	60-200	*22	200	55	170	146	146	11	18.2	49	12	3.5	4
200W 1/4HP	3-10	*18	168	50	140	120	120	9	16	38	12	5	3
	15-90	22	200	148	185	170	156	11	18.2	49	12	3.5	5
	15-90	*22	200	55	170	146	146	11	18.2	49	12	3.5	4
	100-200	28	258	170	220	195	180	11	20.8	57	15	4	7
400W 1/2HP	3-10	22	207	148	185	170	156	11	18.2	49	12	3.5	6
	3-10	*22	200	55	170	146	146	11	18.2	49	12	3.5	4
	15-90	28	263	170	220	195	180	11	20.8	57	15	4	7
	100-200	32	300	185	255	237	215	13	30.2	67	17	4	12.4
750W 1HP	3-25	28	268	170	220	195	180	11	20.8	57	15	4	7
	30-120	32	310	185	255	237	215	13	30.2	67	17	4	14.4
	125-200	40	336	230	310	300	275	15	20.8	79	20	5	35
1500W 2HP	3-25	32	320	185	255	237	215	13	30.2	67	17	4	14.4
	30-120	40	350	230	310	300	275	15	42.2	79	20	5	35
2200W 3HP	3-60	40	360	230	310	300	275	15	42.2	79	20	5	35
	70-120	50	400	280	390	360	330	19	51.7	90	20	5	43
3700W 5HP	3-25	40	360	230	310	300	275	15	42.2	79	20	5	35
	30-80	50	400	280	390	360	330	19	51.7	90	20	5	43

入力轴尺寸 INPUT SHAFT SIZE

入力轴SHAFT			键槽KEYWAY			键KEY
KW	S1h6	P1	W1	T1	Q1	SPEC
0.1/0.2	14	30	5	16	26	5×5×25
0.4	14	30	5	16	26	5×5×25
0.75	19	40	6	21.5	35	6×6×35
1.5	24	50	8	27	45	8×7×45
2.2	28	55	8	31	50	8×7×50

出力轴尺寸 OUTPUT SHAFT SIZE

出力轴SHAFT		键槽KEYWAY			键KEY
Sh6	P	W	T	Q	SPEC
Φ18	30	5	20	25	5×5×25
Φ22	40	7	25	35	7×7×35
Φ28	45	7	31	40	7×7×40
Φ32	55	10	35.5	50	10×8×50
Φ40	65	10	43.5	60	10×8×60
Φ50	80	14	54	75	14×9×75

备注 NOTE：

1、1#本体（型号为18）C1为33.5，C2为65.5
1# Ontology（Models for 18）
C1 is 33.5，C2 is 65.5

2、2#本体（型号为22）C1为40，C2为80
2# Ontology（Models for 22）
C1 is 40，C2 is 80

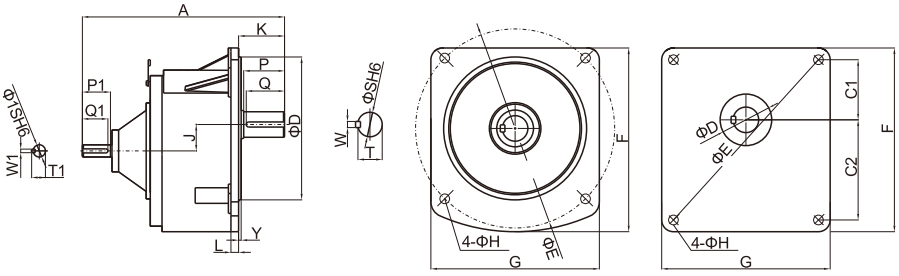

A-出力法兰
A-Output Flange

B-出力法兰
B-Output Flange

- *属于B型出力法兰.
- *Belong to B type output flange.

零件剖面图

DETAIL SECTIONAL VIEW

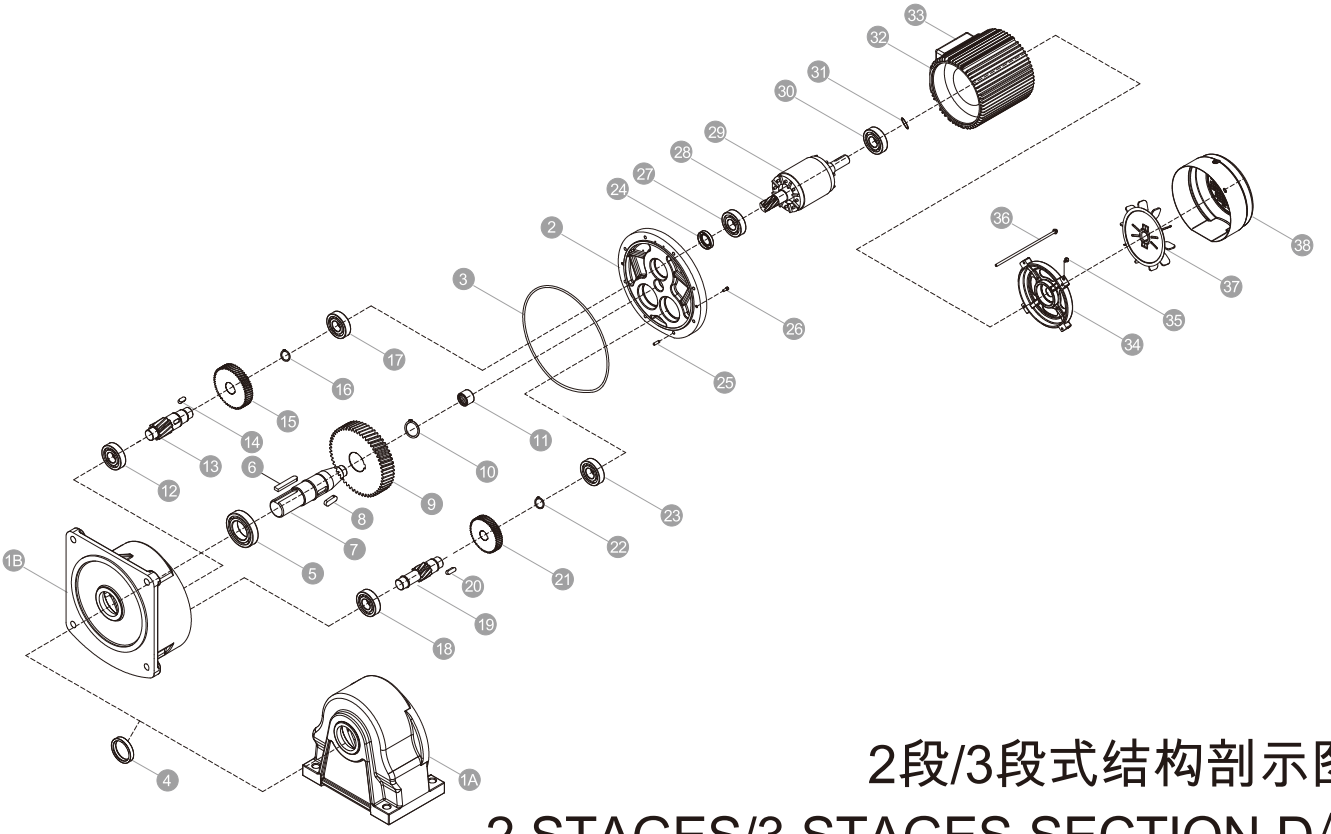

2段/3段式结构剖示图

2 STAGES/3 STAGES SECTION D/A

1A	卧式本体 HORIZONTAL BODY
1B	立式本体 VERTICAL BODY
2	齿轮箱盖 GEARBOX COVER
3	O型环 O-RING
4	出力轴油封 OILSEAL-OUTPUT SHAFT
5	出力轴轴承 BEARING-OUTRUT SHAFT
6	出力轴键 KEY-OUTPUT SHAFT
7	出力轴 OUTPUT SHAFT
8	三段小齿轴键 KEY- 3 STAGES
9	三段大齿轮 GEAR-3 STAGES
10	C-扣环 SNAP RING
11	出力轴滚针轴承 THE OUTPUT SHAFT NEEDLE BEARING
12	二段齿轴轴承 BEARING-2 STAGES
13	二段小齿轴 PINION-2 STAGES
14	二段小齿键 KEY-2 STAGES
15	二段大齿轮 GEAR-2 STAGES
16	C-扣环 SNAP RING
17	二段齿轮轴轴承 BEARING-2RDSTAGE PINION
18	一段齿轴轴承 BEARING-1NDSTAGE PINION
19	一段齿轴 PINON-1 STAGES
20	一段小齿轴键 KEY-1 STAGES
21	一段大齿轮 GEAR-1 STAGES
22	C-扣环 SNAP RING
23	一段齿轴轴承 BEARING-1RDSTA
24	入侧油封 OIL SEAL-MOTOR SHAFT
25	定位销 PIN
26	内六角螺丝 HEX-HEAD SCREW
27	马达轴轴承 BEARING-MOTOR SHAFT
28	马达齿轴 MOTOR SHAFT
29	转子 ROTOR
30	马达轴轴承 BEARING-MOTOR SHAFT
31	波浪弹簧 WAVE SPRING
32	线圈总成 COILASSEMBLY
33	接线盒 WIRE BOX
34	马达后盖 REAR COVER-MOTOR
35	风罩螺丝 SCREW-FAN COVER
36	马达螺丝 BOLT-MOTOR
37	风叶 FAN
38	风罩 FAN COVER-MOTOR

刹车零件分解图
BRAKE UNIT SECTION DIAGRAM

短型安全刹车器

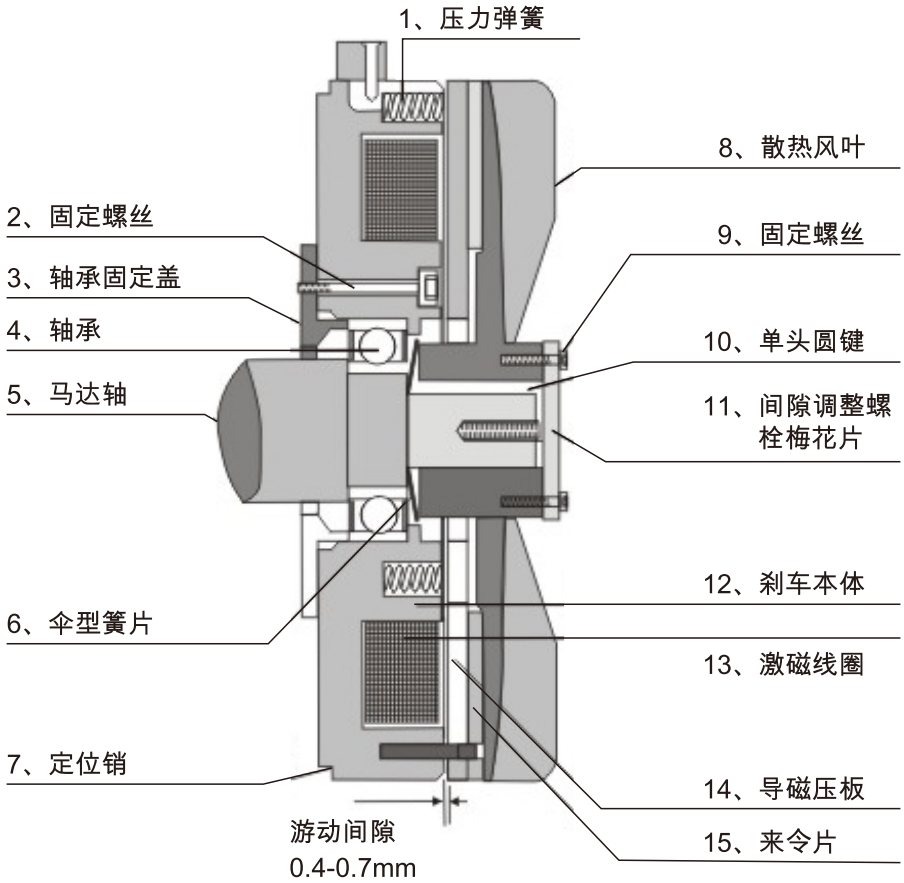

1	压力弹簧 PRESSURE SPRING	6	伞型簧片 DISC SPRING
2	固定螺丝 FIXED SCREW	7	定位销 FIXED PIN
3	轴承固定盖 FIXED BEARING PLATE	8	散热风叶 FAN
4	轴承 BEARING	9	固定螺丝 FIXED SCREW
5	马达轴 MOTOR SHAFT	10	固定键 KEY

SHORT SAFETY BRAKE

短型安全刹车器

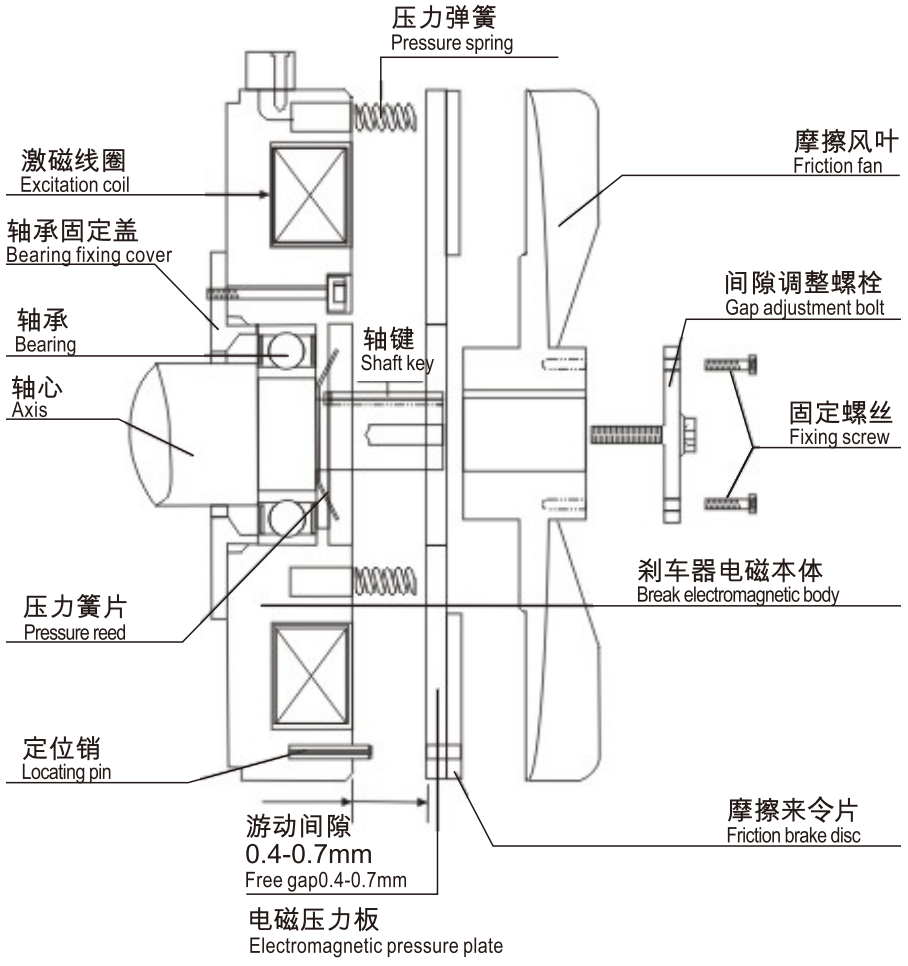

11 调整螺栓
GAP ADJUSTMENT BOLT

12 刹车本体
BRAKE HOUSING

13 激磁线圈
BRAKE COIL

14 导磁压板
FRICTION PLATE

15 来令片
FRICTION BRAKE
BRAKE DISC

刹车间隙调整
ADJUST BRAKE CLEARANCE

间隙调整螺栓正面图
Front view of
gap adjusting bolt

1、请先移除固定螺丝
Please remove the fixing screw first.

2、每向右调整一格，其间距缩小0.07-0.10mm
Each space is adjusted to the right , and the spacing is reduced by 0.07-0.10mm.

故障排除

TROUBLE SHOOTING

直流刹车器故障排除 TROUBLE SHOOTING FOR DC BRAKE UNIT

不良原因 DEFECTIVE REASON	原因分析 POSSIBLE ANALYSIS	解决方式 SOLUTION METHOD
刹车器不动作 NO ACTION OF BRAKE	未供电源 NO POWER SUPPLY	供应电源 SUPPLY POWER
	来令片磨损 BRAKE DISC WORN OUT	换新来令片 USE NEW BRAKE DISC
	间隙过大 LARGE CLEARANCE	调整间隙 ADJUST CLEARANCE
	电源电压不足 LOW VOLTA	提供正确电压 USE CORRECT VOLTAGE
	电源供应器损坏 POWER SUPPLY DAMAGE	电源供应器换新 USE NEW POWOR SUPPLY
	异物入侵 DIRTY INSIDE	清洁零件 CLEAN PARTS
	使用电压错误 WRONG VOLTAGE	使用正确电压 CORRECT VOLTAGE
	接线脱落 CONNECT WIRE LOST	重新接线 RE-CONNECT WIRE
	来令片卡死 BRAKE DISC LOCKED	清洁零件 CLEAN PARTS
	煞车线圈烧毁 BRAKE COIL BURNED-OUT	更换刹车线圈 USE NEW BRAKE COLL
刹车移动 OVER STOP OF BRAKE	来令片磨损 BRAKE DISC WORN OUT	换新来令片 USE NEW BRAKE DISC
	间隙过大 LARGE CLEARANCE	调整间隙 ADJUST CLEARANCE
	来令片沾染油渣 SURFACE W/OIL	清洁来令片 CLEAN BRAKE DISC
	负载过大 OVER LOADING	重新设计 RE-DESIGN BRAKE UNIT
	煞车表面歪斜 DISC SURFACE TWIST	更换零件 USE NEW PARTS
	下降重量过大 HUGE MOMENTUM	机构重新设计 SYSTEM RE-DESIGN
	选用机型错误 SELECT WRONG TYPE	选用正确机型 RE-SELECT UNIT
	环境温度过高 HIGH TEMPERATURE	改善环境温度 ADJUST TEMPERATURE

减速机故障排除 GEAR MOTOR TROUBLE SHOOTING

不良原因 DEFECTIVE REASON		原因分析 POSSIBLE ANALYSIS	解决方式 SOLUTIONG METHOD
噪音 NOISE	齿轮敲击声 KNOCKING	齿轮表面受伤 HURT GEAR SURFACE	更换受伤齿轮组 REPLACE GEAR SFT
	连续性杂音 CONTINUALLY	培林损坏 BAD BEARING	更换损坏培林 REPLACE BEARING
	周期性杂音 PERIODICALLY	异物附着齿面 PARTICLE INSIDE	检查齿轮齿面 CHECK GEAR
	斯斯声 NEIGH	油量不足 LACK OF LUBRICANT	添加润滑油 FILL WITH LUB-OIL
	断续性杂音 INTERMITTENTLY	润滑油不洁 DIRTY LUBRICANT	更换新润滑油 REPLACE LUBRICANT
震动 VIBRATING	固定底座振动 MOUNTING BASE M	安装平面歪斜 BAD SURFACE MOUNTIN	重新调整固定底座 E-ADJUST MOUNTING BASE
	出力轴振动 OUTPUT SHAFT MOVING	培林损坏 BEARING BROKEN	更换损害培林 REPLACE WOUNDED BRARING
	内部齿轮零件振动 INSIDE GEAR PARTS MOVEMENT	齿轮受伤 GEAR WOUNDED	更换受伤齿轮 REPLACE WOUNDED BEARING
	本体振动 HOUSING VIBRATING	齿轮组安装不良 BAD GEAR ASSEMBLY	重新调整齿轮组 RE-ADJUST GEAR SET
漏油 LEAKAGE	油封漏油 OIL SEAL LEAKAGE	油封硬化 OIL SEAL TOO HARDEN	更换损坏油封 REPLACE WOUNDED OIL SEAL
	本体漏油 HOUSING LEAKAGE	本体有砂孔 HOUSING HAD SAND HOLE	更换砂孔本体 REPLACE SAND HOLE HOUSING
	结合面漏油 CONNECT SURFAXE LEAKAGE	O-型环损坏 O-RINGBR	更换损坏O-型环 REPLACE WOUNDED O-RING
过热 OVER-HEAHING	油封 BAD OIL SEAL	油封太紧 OIL SEAL TOO TIGHT	更换太紧油封 REPLACE TIGHTEN OIL SEAL
	本体过热 HOUSING TOO HEAT	过负载 OVER LOAD RUNNING	重新计算负载马力 RE-CALAULATE LOADING
	缺润滑油 LESS LUBRICANT	油量不足 LACK OF LUBRICANT	加入润滑油 FILL WITH LUBRICANT
	马达过热 MOTOR TOO HEAT	马达不良 DEFECTIVE MOTOR	更换新马达 REPLACE NEW MOTOR

齿轮减速马达使用说明书

INSTRUCTIONS FOR GEAR MOTOR

欢迎选用万鑫公司系列齿轮减速马达（减速机）。使用前请参照此说明书进行相关安装。
Welcome to choose Wanshsin series gear reducer motors (reducers). Please refer to these instructions before installation and using.

1 使用前 Before using

1、请检查产品型号、电机功率、电机额定电压、安装方式、减速比及出力轴尺寸是否符合您的要求，如有不符，请及时与您的经销商联系，以便及时处理。

2、在减速箱上有胶栓的减速马达(减速机)需将胶栓上面黄色的小胶栓拔掉，否则经长时间连续运行后有漏油的危险。

1、Please check if the product type, motor power, motor rated voltage, installation, reduction ratio and size of output bearing meet your requirements; if not, please contact your dealer for timely processing.

2、For the gear reducer motors (reducers) with plastic plugs in the gearboxes, pull out the yellow small plastic plugs,or else the oil may spill after long hours of running.

2 使用环境 Environment of use

1、请勿在爆炸性环境、易燃性气体环境、腐蚀性环境以及漏水的环境使用此减速马达。

2、请勿强行弯曲、拉扯或夹住电源、电缆线和电机导线。

3、电机安装完成后，必须使用接地线良好接地，接地线位置位于接线盒上面。

4、安装、连接、检查等须由专业技术人员进行。

5、安装环境须干燥且通风良好，周围温度-5℃~40℃之间，异常高温或低温时需特别注明。

6、齿轮减速机马达需安装在平整且坚固的底座上。

1、Do not use the gear reducer motor in the environment with explosives, flammable gas,corrosion, or water leaks.

2、Do not forcibly bend, pull or pinch the power supply, cables and motor wires.

3、When the motor is installed, it must be grounded properly with a ground wire, which is located on the junction box.

4、Installation, connection and inspection must be carried out by professional technicians.

5、The installation environment must be dry and well ventilated, the ambient temperature should be -5℃ ~40℃ , and extreme

6、The gear reducer motor should be installed on a flat and solid base.

3 安装 Installation

1、当使用连轴器连接输出轴时，须安装固定且务必使两轴平行，底座需以安装孔径相适应的螺栓进行安装，确保齿轮减速马达紧密牢固。

2、所有安装在出力轴上的装备必须轻装于轴上，勿使用铁锤及其它钝器等敲击出力轴，避免因安装过紧而引起的轴承损坏。

3、滑轮、链轮或齿轮在装配时尽量靠近出力轴承以减少弯曲应力。应使用不超过出力轴直径6倍的链轮、皮带轮等与出轴连接。使用时请配合H7公差使用，避免使用中发出异常噪音及轴面受损。

4、安装完成后，可以在出力轴表面涂上适当的防锈油或防锈漆以保护出力轴避免生锈。

5、根据电源电压，这择适合的接线方式接好电机线盒内引线，并且必须接地线。接线盒内接错线会导致电机烧毁。要根据电机铭牌上额定电流，建议按5A/mm^{2}的电流密度选择合适尺寸电缆线给电机供电。

6、使用变频器给带刹车功能的齿轮减速马达供电时，需将刹车线(黄色)单独提供交流220V供电，供电应与齿轮减速马达供电同步。

7、齿轮减速马达齿轮箱内已经加注好合适的润滑油，使用前请勿再加润滑油。正常使用超过10000小时后，可加放适合的0号润滑油。

8、安装完成后，再次检查齿轮减速马达安装面是否平整，确保不能有任何物品顶到电机，否则会造成电机烧毁。

1、When the output bearing is connected with the coupler, it must be fixed and the two shafts must be parallel,the base should be installed with the bolts of appropriate aperture, and ensure that gear reducer motor is fixed tightly and securely.

2、All the equipment installed on the output bearing must be installed lightly;do not knock the output bearing with a hammer or other blunt objects to prevent bearing damage caused by tight installation.

3、The pulleys, sprockets and gears should be installed as close as possible to the output bearing to reduce bending stress. Connect to the output bearing through sprocket or belt pulley with a diameter no more than 6 times of the output bearing. Please use in combination with H7 tolerance to avoid noise and damage to the bearing surface.

4、After installation, coated suitable anti-rust oil or paint on the surface of the output bearing to avoid rusting.

5、Select the proper wiring method to connect the lead wire in the motor connecting junction box with ground wiring according to the power voltage. Wrong wiring of the box will lead to damage of the motor. According to the rated current on the nameplate of the motor, it is recommended to select the wire of proper size for power supply based on the current density of 5A/mm2.

6、When the gear reducer motor with brake function is powered by frequency converter, the brake line (yellow) should be provided with AC 220V power supply separately, and the power supply should be synchronized with the gear reducer motor.

7、The gearbox of the gear reducer motor has been filled with appropriate lubricating oil, and it isnt required to add lubricating before use. After normal use for 10,000 hours, add 0# lubricating oil.

8、After installation,check again if the mounting surface of gear reducer motor is flat,and ensure that no objects prop the motor,or else it will cause motor burn.

4 使用中 In use

1、使用中电源电压变动超过10%时，有可能烧毁电机，同时伴有出力扭力降低或异常。

2、电机超负荷运行时有可能烧毁，请在运行初次测试电机电流是否在额定电流值内。

3、电机即使在正常运行状态，有时表面温度也会有超过70℃的现象。电机运转时，若有靠近电机的可能，请制作“高温注意”图标并贴于电机显眼处。

4、电机反转时，单相电机按接线图进行调整。三相电机只需要将电源线中两相对调即可。

1、If the variation of the supply voltage in use exceeds 10%, the motor might be damaged, accompanied by reduced or abnormal output torque.

2、The motor running overload may be burnt. Before running for the first time, test if the motor current is within the rated range.

3、Even if the motor is in normal operation state, the surface temperature may also exceed 70℃. If it is possible to approach the motor when the motor is running, please affix a "HOT" mark on a conspicuous place on the motor.

4、When the motor is running reversely, adjust single-phase motor according to the wiring diagram.For three-phase motors, just exchange two phases of the power cable.

5 保养与检查 Maintenance and inspection

做一般定期检查时，请注意需注意以下几点:

1、温度上升

齿轮减速马达为F级绝缘，全密闭外扇构造，所以马达表面温度比周围高50℃左右亦属正常。如果温度高于以上时，必须停机检查。(因素:马达或传动系统负载异常)

2、刹车马达来令片因长时间使用会有磨损，请依据刹车间隙值进行调整。

3、异常振动、噪音

正常情况，本机几乎没有振动噪音。若有某些安装异常使用，会产生振动噪音，所以请特别留意。（当空载噪音值在70dB/1M以下时，是被容许的。）

4、马达通风口有时会积聚脏物妨碍通风，所有请清除马达外部，以确保马达正常运行温度。

5、定期检查时，请以500V电阻测量马达线组之绝缘阻抗，确保其1MΩ以上，以避免漏电之危险。

Please pay attention to the following points during the general periodical inspection:

1、Temperature rise

The gear motor of Grade F insulation, is a fully enclosed outer fan structure, it is normal that the temperature of the motor is about 50℃ higher than the ambient temperature. When the temperature exceeds 50℃, the machine must be stopped for inspection. (factor: abnormal load of motor or transmission system)

2、As the lining of the motor abrades due to long-term use, please adjust it according to the brake clearance.

3、Abnormal vibration and noise

There is almost no noise in normal situations. If there is abnormal installation, it will vibrate with noise, so please pay attention to it. (It is tolerable when the idling noise level is below 70dB/1M.)

4、The dirt and dust always cumulate at the vent of the motor to obstruct the ventilation, so please clean the outer part of the motor to ensure its normal operation temperature.

5、Please test the insulating resistance of the motor winding with 500V resistance in periodical inspection to ensure it reaches above 1MΩ to prevent the leakage of electricity.

6 故障处理与咨询 Troubleshooting and consultation

1、发生故障时先对照目录的故障排除表进行处理，不能自行处理的，请联系当地经销商解决。

2、本机故障，换用零部件或咨询时，请将铭牌上的参数确认后再进行联系：型式(TYPE)马力(OUTPUT)减速比(RATIO)制造编号(NO.)等

1、Deal with the fault according to the Trouble-shooting Table at first. If it cannot be tackled by yourself, please contact your local distributor for help.

2、When changing parts or consulting about the malfunction of the machine, please confirm the parameters on the nameplate before contact: Type, Output, Ratio, No. etc.

7 质保 Warranty

1、缩框型号齿轮减速马达仅电机线圈部分保修一年，齿轮箱部分不保修。如果因齿轮箱损坏而造成线圈部分烧毁，我司将收取维修成本费用。

2、标准框号齿轮减速马达出厂后，保修一年。如因客户拆装或所带负载原因损坏，我司将收取维修成本费用。

1、The frame-shrinking gear reducer motor only has the warranty for its motor winding but not for the gear box. If the coil is partly burned due to the damage of the gear box, we shall claim the maintenance cost.

2、The standard frame type gear reducer motor has one year warranty after leaving the factory. If it is damaged due to customer's disassembly or the load cause,we will claim the maintenance cost.

2018年9月版

WANSHSIN®

萬鑫精工

致力于打造世界一流的中国传动品牌

经销商
Distributor